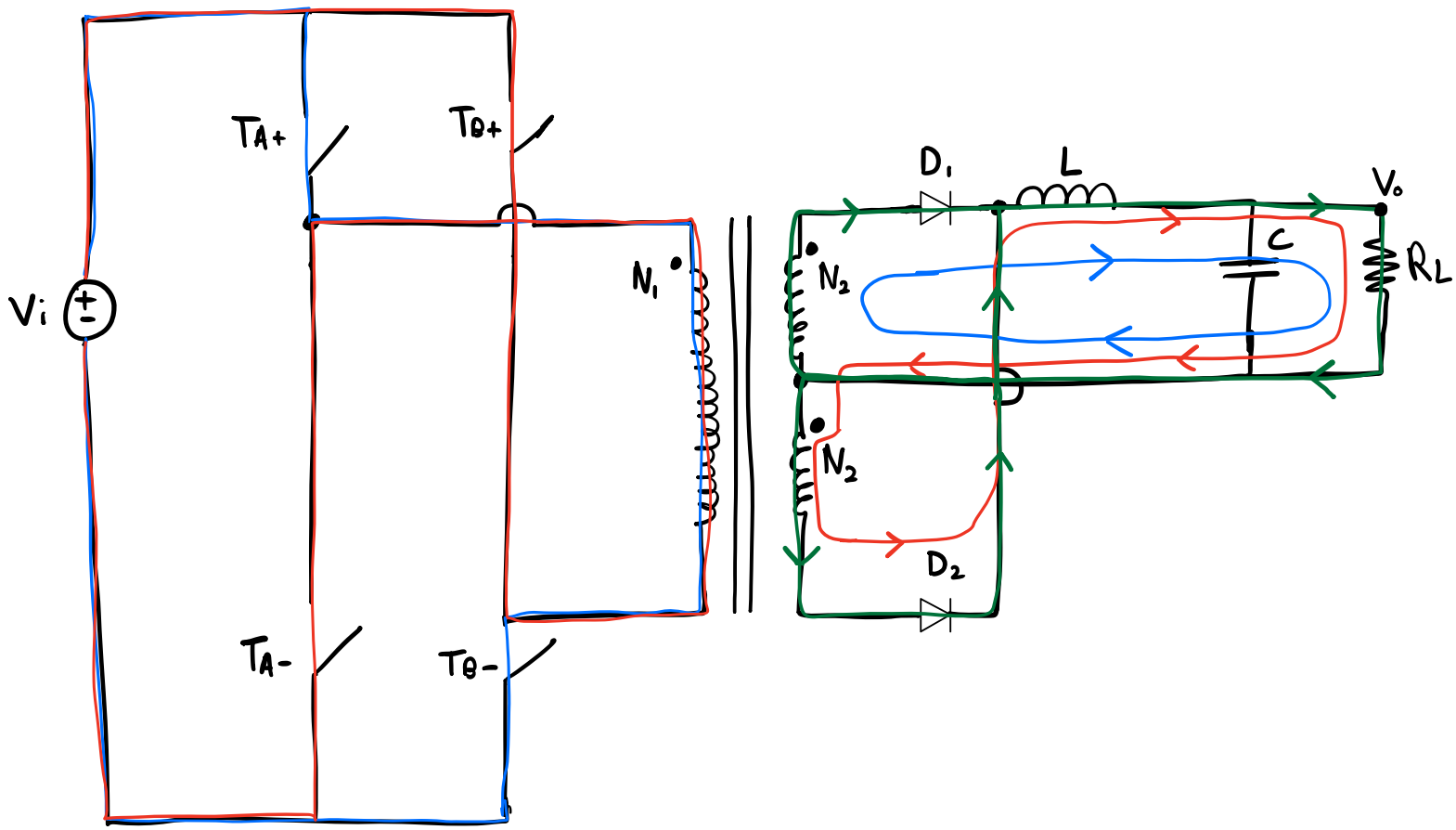

Case 1:

- T_{A+} and T_{B-} ON

Case 2:

- T_{B+} and T_{A-} ON

Case 3:

- All switches OFF

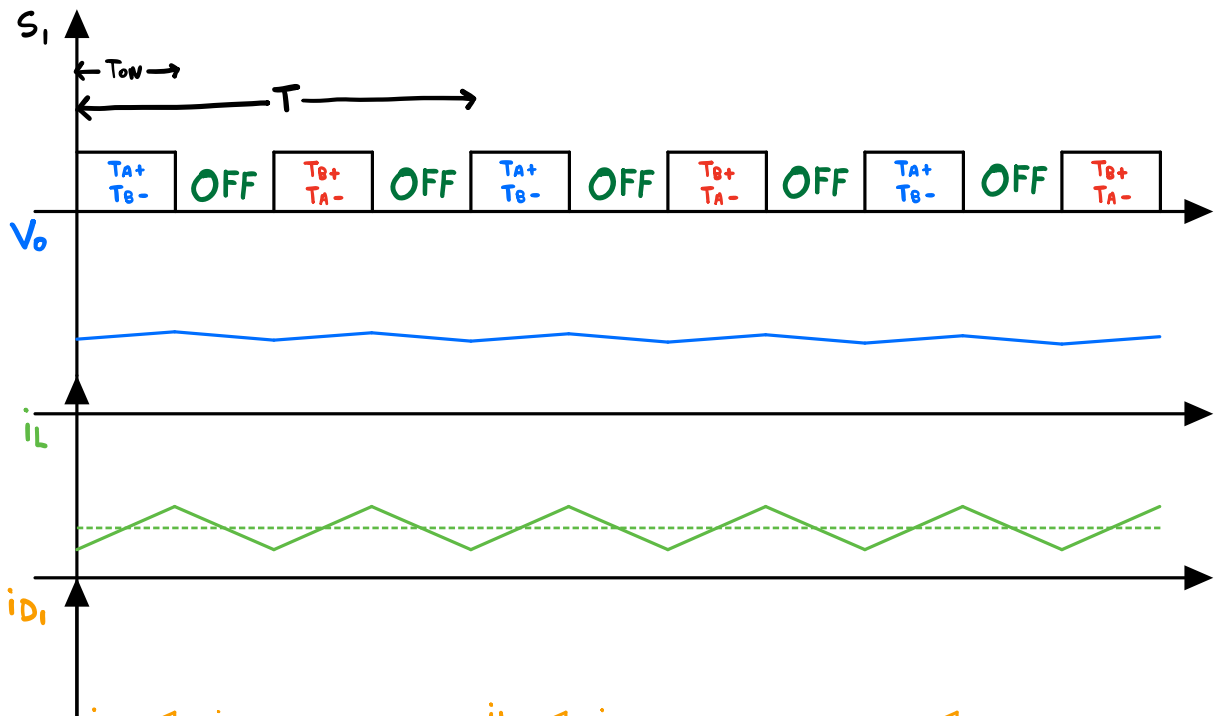

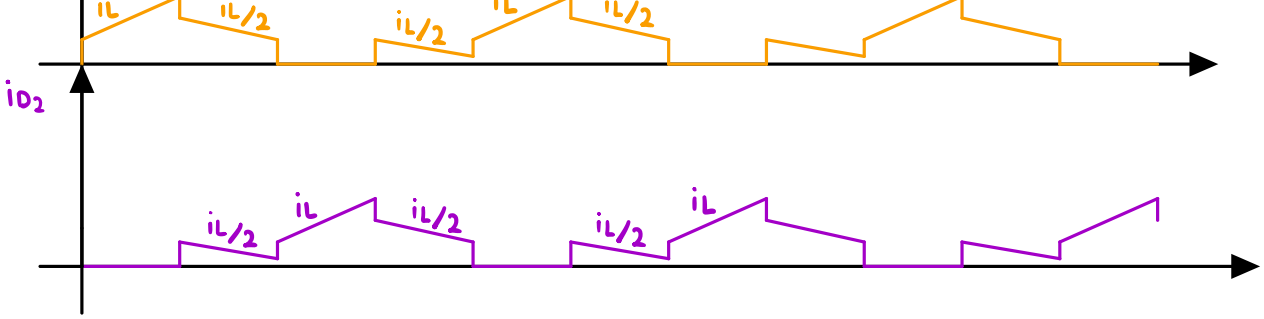

Full Bridge:

$$V_o = 2V_s\left(\frac{N_s}{N_p}\right)D$$

$$V_s - V_L - V_o = 0$$

$$V_o = V_s - V_L$$

Half Bridge:

$$V_o = V_s\left(\frac{N_s}{N_p}\right)D$$

$$V_L - V_o = 0$$

400V = T_{A+} and T_{B-}
−400 V = T_{B+} and T_{A-}
0V = T_{A-} and T_{B-}
'or'
T_{A+} and T_{B+}

$D = 0.7$

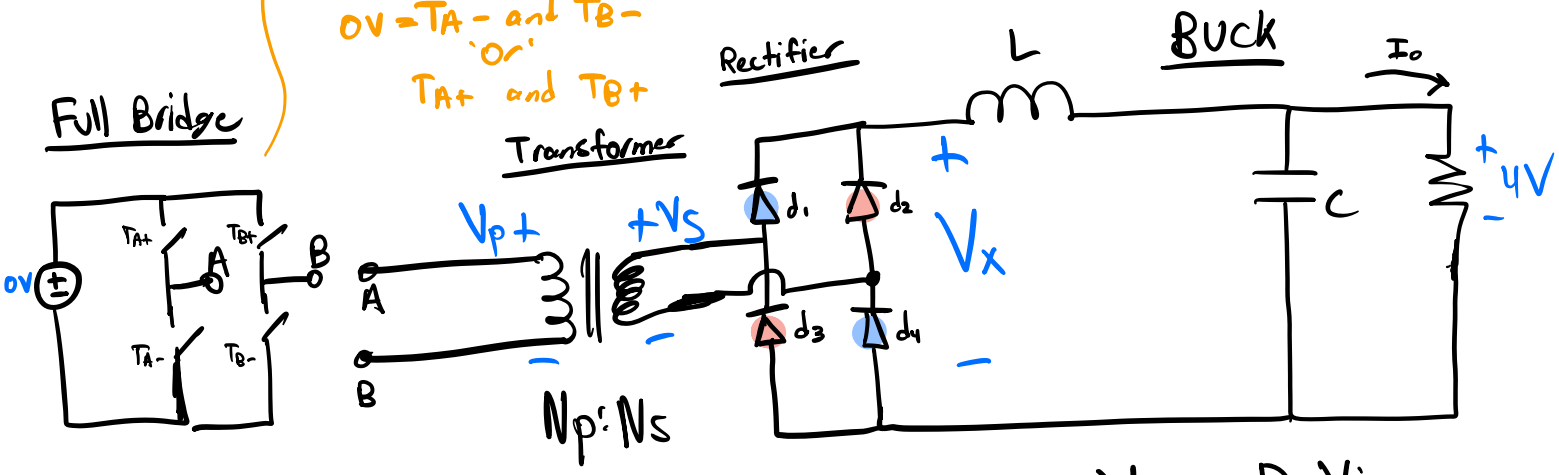

$$V_o = D \cdot V_{in}$$

$$\therefore V_{in} = \frac{4}{0.7} = 5.71V$$
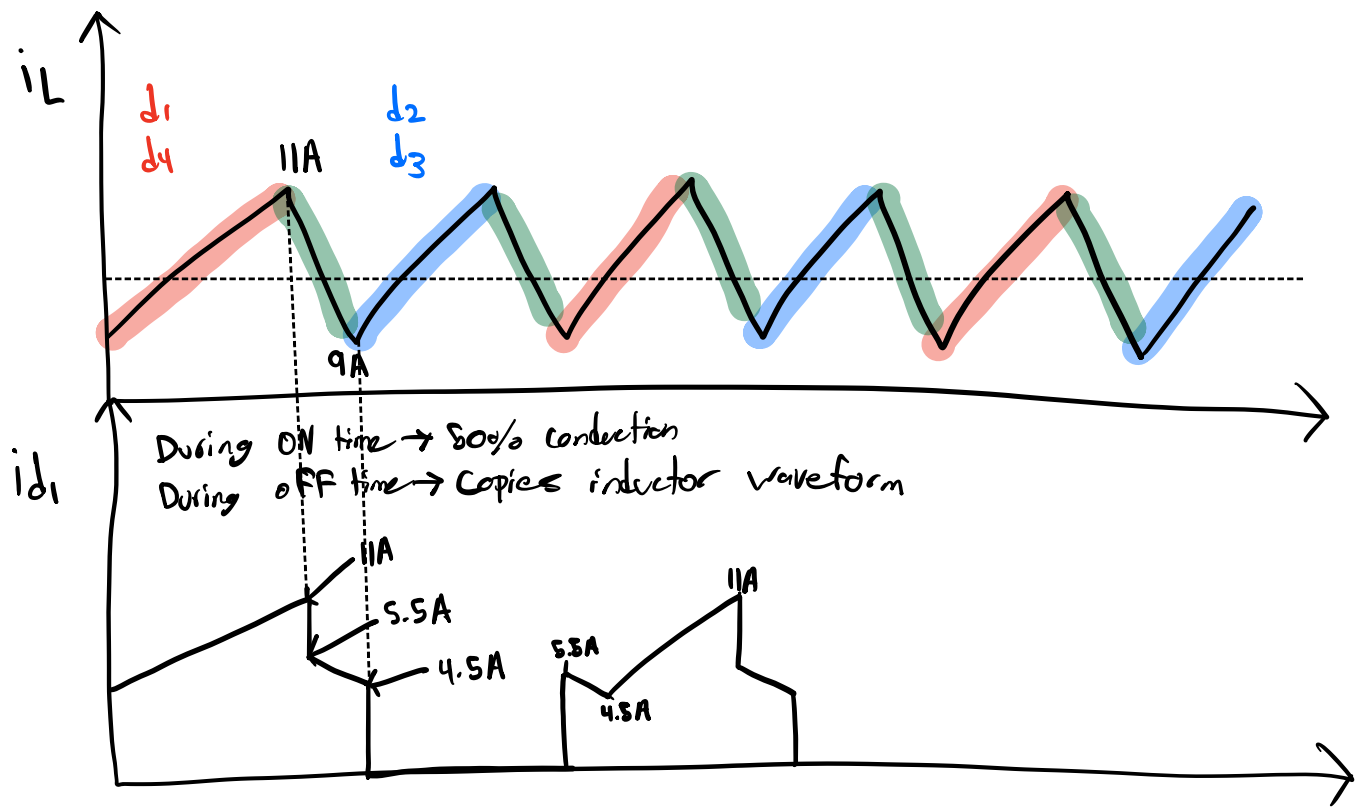
$$\frac{V_p}{V_s} = \frac{N_p}{N_s} = T \rightarrow \frac{400V}{5.71V} = 70.05 \text{ Turns}$$